THIS COPY IS PROVIDED ON A RESTRICTED BASIS AND IS NOT TO BE USED IN ANY WAY DETRIMENTAL TO THE INTERESTS OF PANDUIT CORP.

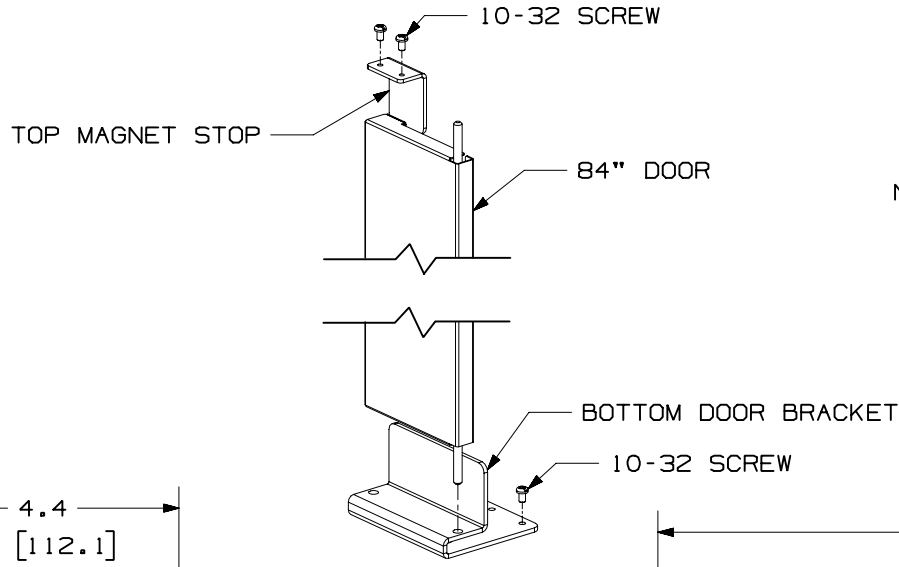

PANDUIT P/N	WEIGHT
NFD484	10.4 LBS/EACH 4717 g/EACH

NOTES:
1. VISIT OUR ON-LINE CATALOG AT WWW.PANDUIT.COM FOR A CURRENT LIST OF PRODUCTS APPLICABLE FOR USE WITH THIS PART.
2. DIMENSIONS IN PARENTHESIS ARE METRIC (mm).
3. COMPONENTS:
   1- 84" DOOR
   1- BOTTOM DOOR BRACKET
   1- TOP MAGNET STOP
   8- #10-32 X .312 SCREWS
4. MATERIAL: STEEL; POWDER COATED BLACK

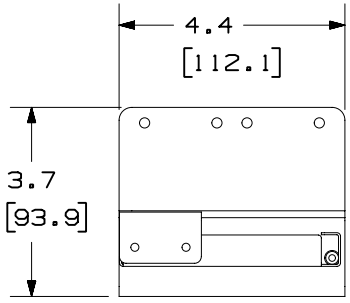

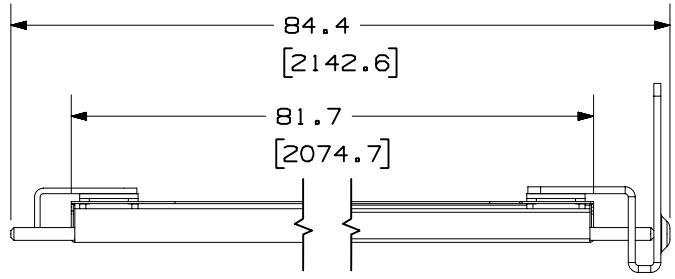

REV	DATE	BY	CHK	DESCRIPTION	ECN - R	CUST	SUP	OTH
R	11-20-02	ADP		RELEASED TO PRODUCTION	10099-33			

MODEL FILENAME: V10099AQ_NFD484_00.PRT

CAD FILENAME/LAYERS: V10099AQ_DC_00A.PRT

PANDUIT CORP. TINLEY PARK, ILLINOIS

4 X 84" NETFRAME HINGED DOOR ASSEMBLY (NFD484) CUSTOMER DRAWING

UNLESS OTHERWISE SPECIFIED, DIMENSIONAL TOLERANCES ARE:
(.X) ± (.XXX) ± .03
(.XX) ± .06 ANGLES ±

UNLESS OTHERWISE SPECIFIED, ALL DIMENSIONS ARE GIVEN IN INCHES, THIRD ANGLE PROJECTION.

DRAWN BY: ADP

MAT'L: SEE NOTES

SCALE: NONE

DATE: 11-20-02

CHK'D:

DRAWING NO.: 10099-33

DWG SIZE: A