THIS COPY IS PROVIDED ON A RESTRICTED BASIS AND IS NOT TO BE USED IN ANY WAY DETRIMENTAL TO THE INTERESTS OF PANDUIT CORP.

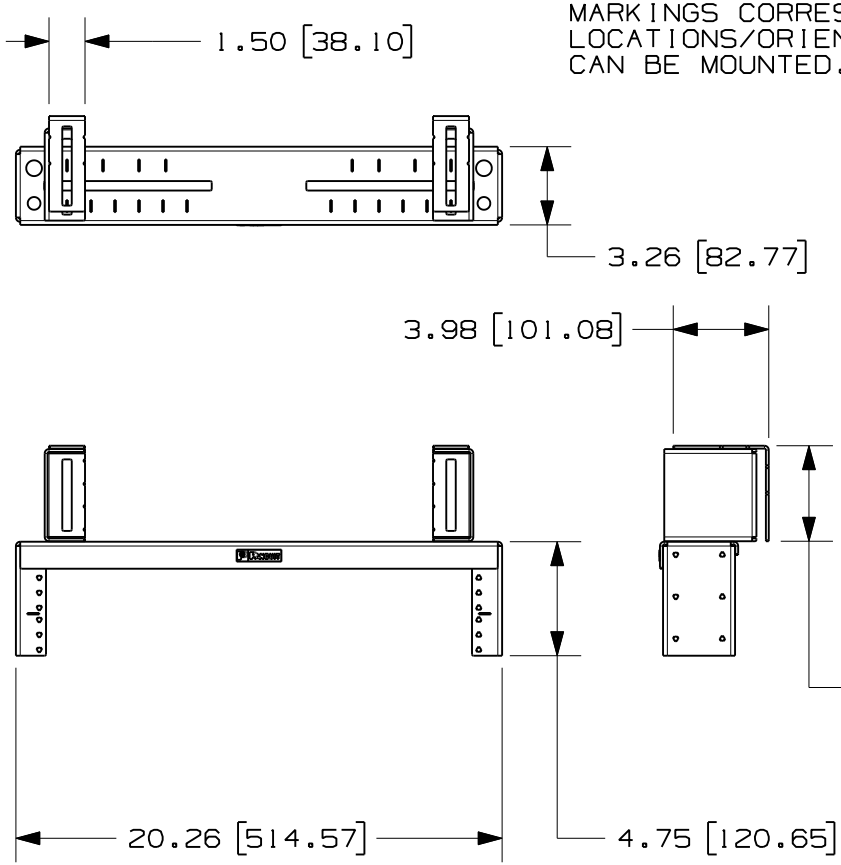

MARKINGS CORRESPOND TO THE VARIOUS LOCATIONS/ORIENTATIONS BRACKETS CAN BE MOUNTED.

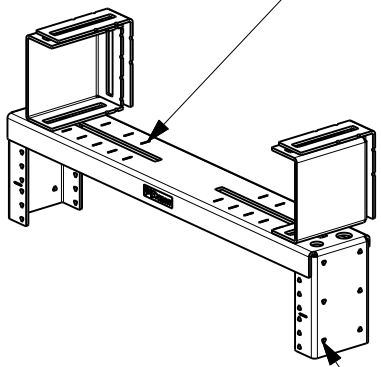

PANDUIT PART NO.	WEIGHT
PZLRB2	9.22 LBS/EACH 4.18 kgs/EACH

NOTES:
1. SEE CURRENT CATALOG FOR ADDITIONAL PART NUMBER SUFFIXES TO INDICATE COLOR AND OR PACKAGE QUANTITY.
2. SEE CATALOG FOR COMPLETE LIST OF PARTS APPLICABLE FOR USE WITH THIS PART.
3. DIMENSIONS IN PARENTHESES ARE IN METRIC.
4. PART INCLUDES:
   1- MAIN BRACKET
   2- SQUARE BRACKETS
   2- L-SHAPED BRACKETS
   6- 3-8/16 HEX SERRATED FLANGE NUTS
   6- 3-8/16 CARRIAGE BOLTS
   2- #12-24 SCREWS (4 PACK)
5. CABLE MANAGEMENT OPTIONS:
   - BEND RADIUS POSTS (PZBR4)
   - VERTICAL D-RINGS (CMVDR2)

HOLES FOR ATTACHING CABLE MANAGEMENT PRODUCTS. (SEE NOTE 5)

MODEL FILENAME: V10521AB/02A.PRT

CAD FILENAME/LAYERS: V10521AB_DC/02A.PRT

PANDUIT CORP. TINLEY PARK, ILLINOIS

PanZone Overhead Distribution Rack (PZLRB2) CUSTOMER DRAWING

UNLESS OTHERWISE SPECIFIED, DIMENSIONAL TOLERANCES ARE:

INCHES		[METRIC - MILLIMETER]		ANGLE
X.X	+/- 0.03	X.	+/- 0.8	+/- 1°
X.XX	+/- 0.015	X.X	+/- 0.4	
X.XXX	+/- 0.005	X.XX	+/- 0.13	

UNLESS OTHERWISE SPECIFIED, ALL DIMENSIONS ARE GIVEN IN INCHES, THIRD ANGLE PROJECTION.

DRAWN BY: DSI

MAT'L: 11 GA GALVANNEALED STEEL

SCALE: 1:8

DATE: 10/31/2007

CHK'D:

DRAWING NO.: 10521-10

DWG SIZE: A

REV	DATE	BY	CHK	DESCRIPTION	ECN - R	CUST	SUP	OTH
02A	10/31/07	DSI		RELEASED TO PRODUCTION	10521-10			