THIS COPY IS PROVIDED ON A RESTRICTED BASIS AND IS NOT TO BE USED IN ANY WAY DETRIMENTAL TO THE INTERESTS OF PANDUIT CORP.

C

PANDUIT PART NUMBER	WEIGHT
FRA2X2	0.34 LB/EACH (152g/EACH)

G

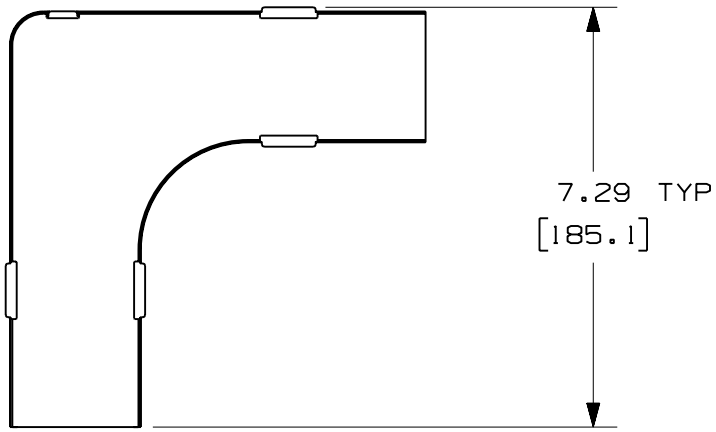

H NOTES:

1. SEE CURRENT CATALOG FOR ADDITIONAL PART SUFFIXES TO INDICATE COLOR AND/OR PACKAGE QUANTITY.
2. THE FIBER-DUCT 2x2 AND FIBERRUNNER 2x2 HORIZONTAL RIGHT ANGLE FITTING IS DESIGNED WITH A MINIMUM 2" (50.8) BEND RADIUS TO PROTECT FIBER OPTIC CABLES.
3. DIMENSIONS IN PARENTHESES ARE IN METRIC.

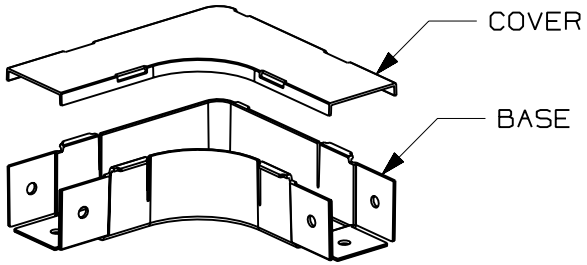

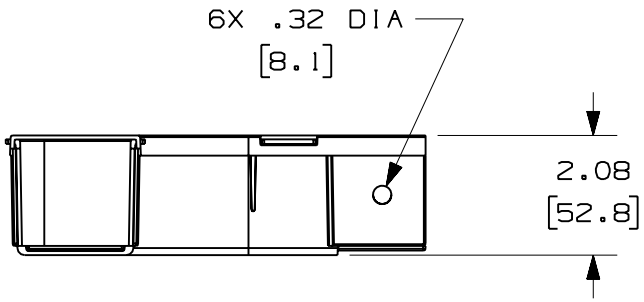

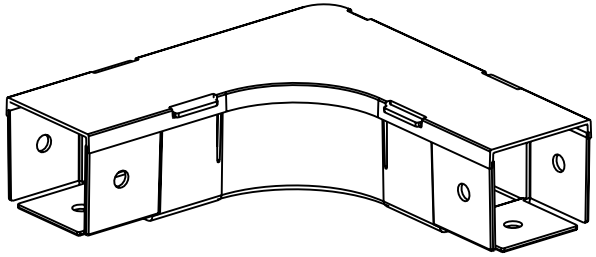

ENG. REF.: D35245CD_DC_FRA2X2_03.prt

CAD FILENAME/LAYERS D FRA2X2.pdf

PANDUIT CORP TINLEY PARK, ILLINOIS

FIBER-DUCT 2x2 AND FIBERRUNNER 2x2 HORIZONTAL RIGHT ANGLE FITTING (FRA2X2)

E CUSTOMER DRAWING

UNLESS OTHERWISE SPECIFIED, DIMENSIONAL TOLERANCES ARE:
(.X) ± (.XXX) ±
(.XX) ±.03 (.8) ANGLES ±

UNLESS OTHERWISE SPECIFIED, ALL DIMENSIONS ARE GIVEN IN INCHES, THIRD ANGLE PROJECTION.

DRAWN BY JBA
MAT'L: ABS
SCALE NONE
DATE 5-20-97
DRAWING NO. 35245-30
DWG A
CHK'D HIW F
SIZE

REV	DATE	BY	CHK	DESCRIPTION	ECN	-	R	CUST	SUP	GMBH
-	--------	---	---	H. REVISED GENERAL NOTES. G. REVISED PART WEIGHT.	--------		--	--		
-	--------	---	---	F. REVISED MATERIAL. E. REVISED DRAWING TITLE.	--------		--	--		
3	12-28-06	MSO	RN	D. REVISED CAD FILENAME. C. REVISED AND REDRAWN.	35245-30		RN	RN		