THIS COPY IS PROVIDED ON A RESTRICTED BASIS AND IS NOT TO BE USED IN ANY WAY DETRIMENTAL TO THE INTERESTS OF PANDUIT CORP.

B

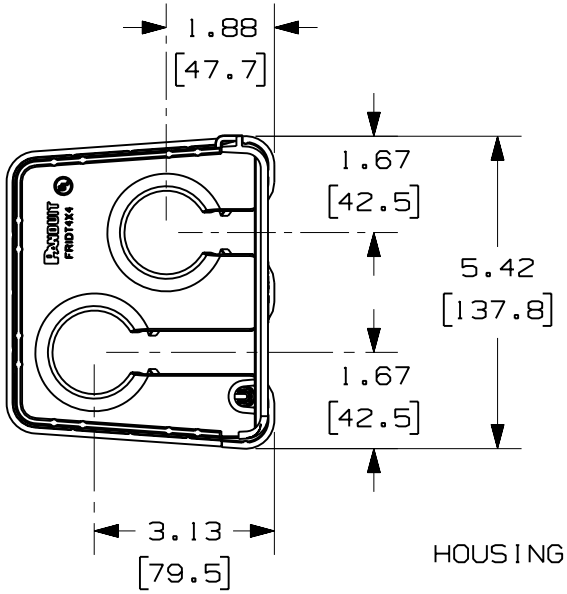

PANDUIT PART NUMBER	WEIGHT
FRIDT4X4	0.51 LB/EACH (230g/EACH)

F

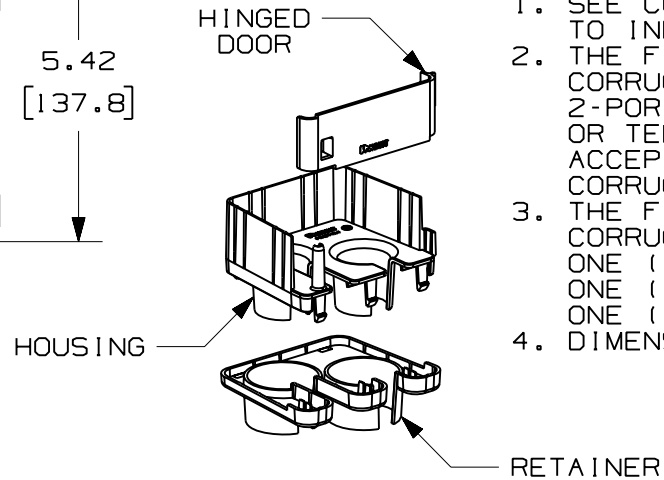

E NOTES:

1. SEE CURRENT CATALOG FOR ADDITIONAL PART SUFFIXES TO INDICATE COLOR AND/OR PACKAGE QUANTITY.
2. THE FIBERRUNNER 4x4 2-PORT SPILL-OUT TO 1 1/2" I.D. CORRUGATED LOOM TUBING IS USED TO CREATE A 2-PORT FLEXIBLE SPILL-OUT INTO EQUIPMENT FRAMES OR TELECOMMUNICATIONS CABINETS. THE SPILL-OUT ACCEPTS TWO (2) PIECES OF 1 1/2" (38.1) I.D. SLIT CORRUGATED LOOM TUBING (CLT150F-X**, CLT150F-T20)
3. THE FIBERRUNNER 4x4 2-PORT SPILL-OUT TO 1 1/2" I.D. CORRUGATED LOOM TUBING INCLUDES:
   ONE (1) 2-PORT SPILL-OUT HOUSING,
   ONE (1) 2-PORT SPILL-OUT RETAINER,
   ONE (1) 2-PORT SPILL-OUT HINGED DOOR
4. DIMENSIONS IN PARENTHESES ARE IN METRIC.

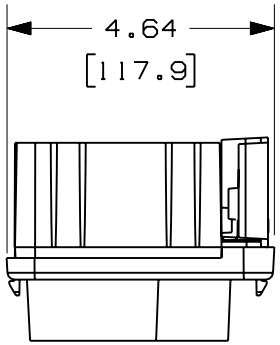

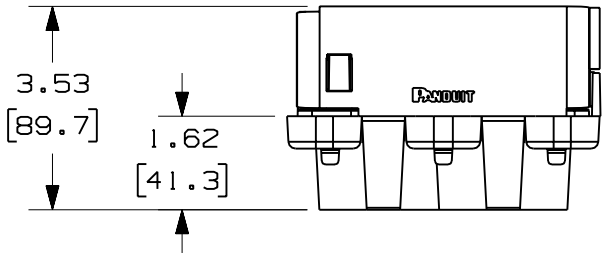

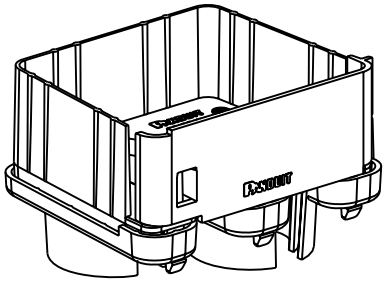

ENG. REF.: D37847DH_DC_FRIDT4X4_01.prt

CAD FILENAME/LAYERS D FRIDT4X4.pdf

PANDUIT CORP TINLEY PARK, ILLINOIS

FIBERRUNNER 4x4 2-PORT SPILL-OUT TO 1 1/2" I.D. CORRUGATED LOOM TUBING (FRIDT4X4)

C CUSTOMER DRAWING

UNLESS OTHERWISE SPECIFIED, DIMENSIONAL TOLERANCES ARE:
(.X) ± (.XXX) ±
(.XX) ±.03 (.8) ANGLES ±

UNLESS OTHERWISE SPECIFIED, ALL DIMENSIONS ARE GIVEN IN INCHES, THIRD ANGLE PROJECTION.

REV	DATE	BY	CHK	DESCRIPTION	ECN	-	R	CUST	SUP	GMBH
-	- - - - - - - -	- - -	- - -	F. REVISED PART WEIGHT	- - - - - - - -		- -	- -		
-	- - - - - - - -	- - -	- - -	E. REVISED GENERAL NOTES D. REVISED CAD FILENAME	- - - - - - - -		- -	- -		
2	7-6-06	DTP	RN	C. REVISED DRAWING TITLE B. REVISED AND REDRAWN	37847-85		RN	RN		

DRAWN BY MSO
MAT'L: ABS
SCALE NONE
DATE 12-27-01
DRAWING NO. 37847-85
DWG A SIZE
CHK'D WAB