THIS COPY IS PROVIDED ON A RESTRICTED BASIS AND IS NOT TO BE USED IN ANY WAY DETRIMENTAL TO THE INTERESTS OF PANDUIT CORP.

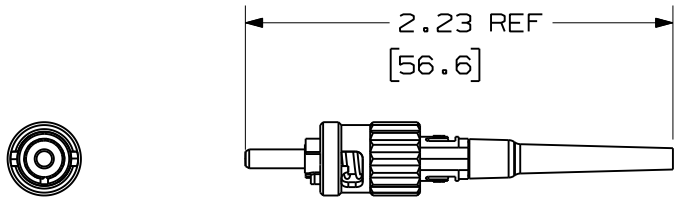

PANDUIT PART NUMBER	FIBER TYPE	FERRULE TYPE
FSTSCBU	9/125um SINGLEMODE	ZIRCONIA
FSTMCXAQ	50/125um MULTIMODE	ZIRCONIA
FSTMC5BL	50/125um MULTIMODE	ZIRCONIA
FSTMC6EI	62.5/125um MULTIMODE	ZIRCONIA
FSTMPC5BL	50/125um MULTIMODE	POLYMER
FSTMPC6EI	62.5/125um MULTIMODE	POLYMER

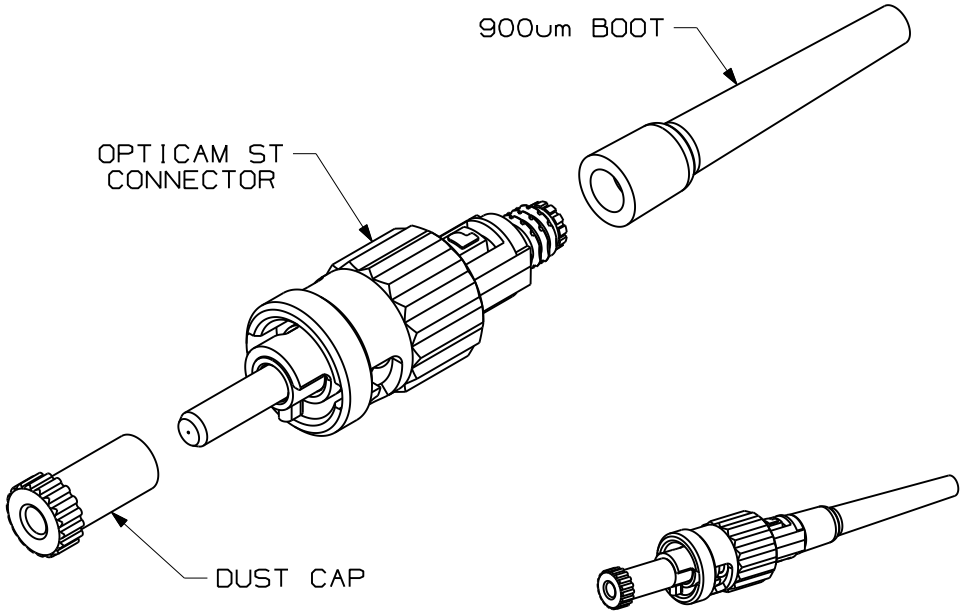

NOTES:
1. SEE CATALOG FOR ADDITIONAL PART NUMBER SUFFIXES TO INDICATE COLOR AND/OR PACKAGE QUANTITY
2. ACCEPTS 50/125um, 62.5/125um, 50/125 OM3 MULTIMODE OR 9/125um SINGLEMODE, 900um BUFFERED GLASS OPTICAL FIBER.
3. FULLY COMPLIES WITH THE FIBER OPTIC CONNECTOR PERFORMANCE REQUIREMENTS AS SPECIFIED BY TIA/EIA-568-B.3.
4. MATERIAL:
   BODY/HARDWARE: PLASTIC
   BOOT: THERMOPLASTIC RUBBER
   FERRULE: ZIRCONIA CERAMIC OR POLYMER
5. ALL MATERIALS AND COMPONENTS USED MEET THE MATERIAL RESTRICTIONS OF RoHS, (EUROPEAN DIRECTIVE 2002/95/EC ON THE RESTRICTION OF HAZARDOUS SUBSTANCES) AS PROPOSED BY THE RoHS TECHNICAL ADAPTATION COMMITTEE.
6. DIMENSIONS IN BRACKETS ARE METRIC [mm].
7. 1.6/2.0mm AND 3.0mm BOOT ASSEMBLIES ARE AVAILABLE SEPARATELY.

REV	DATE	BY	CHK	DESCRIPTION	ECN - R	CUST	SUP	OTH
04	03-16-11	EFK		RELEASED TO PRODUCTION	01894-17			

OPTICAM ST CONNECTOR
CUSTOMER DRAWING

PANDUIT™ CORP.
TINLEY PARK, ILL 60477

THIRD ANGLE PROJECTION

ALL DIMENSIONS ARE GIVEN IN INCHES UNLESS OTHERWISE SPECIFIED.
DIMENSIONAL TOLERANCES ARE:
(.X) (.XXX)±.010 [0.3]
(.XX)±.03 [0.8] ANGLES

REVIEW DRAWING NUMBERS

DRAWN BY: MC
DATE: 05-25-06
CHK'D: MMW

DRAWING FILENAME: M01894AJ_DC/01B
SCALE:
PART NO.: SEE TABLE
DRAWING NO.: 01894-17
SIZE: A