THIS COPY IS PROVIDED ON A RESTRICTED BASIS AND IS NOT TO BE USED IN ANY WAY DETRIMENTAL TO THE INTERESTS OF PANDUIT CORP.

PANDUIT P/N	WEIGHT
FMS1	0.06 LBS/EACH 27 g/EACH

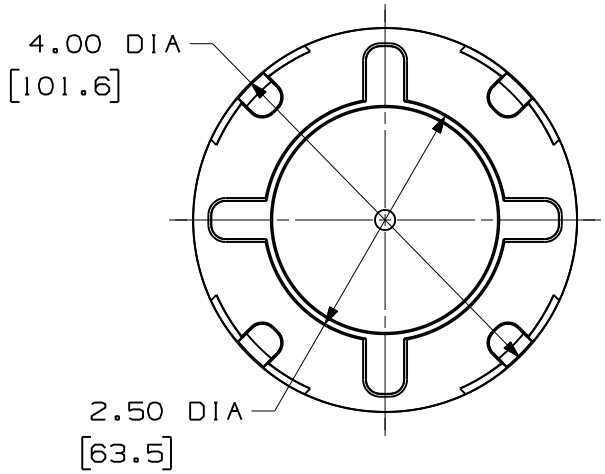

NOTES:
1. VISIT OUR ON-LINE CATALOG AT WWW.PANDUIT.COM FOR A CURRENT LIST OF PARTS APPLICABLE WITH THIS PRODUCT.
2. COMPONENTS:
   2 - SPOOLS WITH DOUBLE SIDED TAPE
3. DIMENSIONS IN PARENTHESIS ARE METRIC.

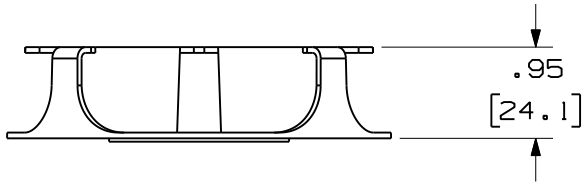

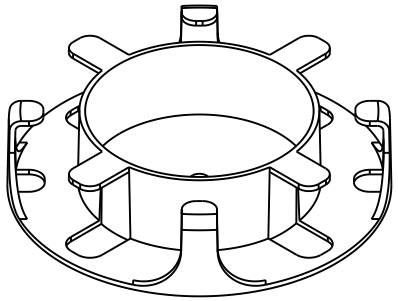

REV	DATE	BY	CHK	DESCRIPTION	ECN - R	CUST	SUP	OTH
01	12-15-10	EFK		RELEASED TO PRODUCTION				

FIBER MANAGEMENT SLACK SPOOL
CUSTOMER DRAWING

PANDUIT™ CORP.
TINLEY PARK, ILL 60477

THIRD ANGLE PROJECTION

ALL DIMENSIONS ARE GIVEN IN INCHES, UNLESS OTHERWISE SPECIFIED.
DIMENSIONAL TOLERANCES ARE:
(.X) (.XXX)±.010 [0.3]
(.XX)±.03 [0.8] ANGLES

DRAWN BY: RVLE
DATE: 02-24-05
CHK'D:
REVIEW DRAWING NUMBERS: A.B.S.

DRAWING FILENAME: V10223CV_DC/02B
SCALE: 1/2
PART NO.: FMS1
DRAWING NO.: 10223-16
SIZE: A