THIS COPY IS PROVIDED ON A RESTRICTED BASIS AND IS NOT TO BE USED IN ANY WAY DETRIMENTAL TO THE INTERESTS OF PANDUIT CORP.

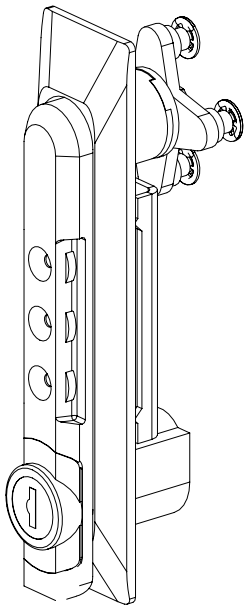

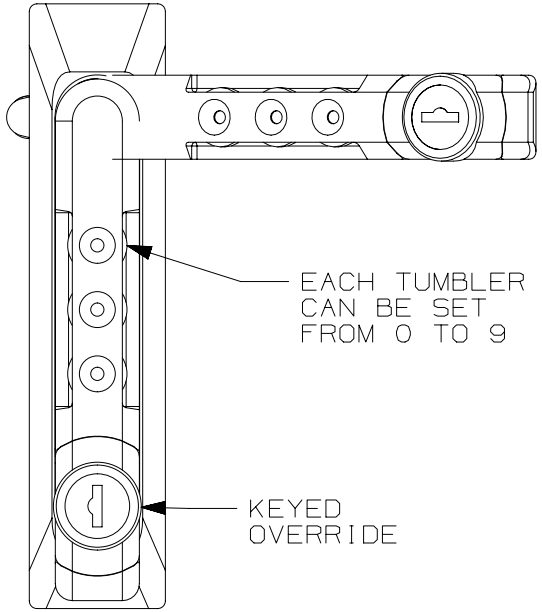

PANDUIT P/N	WEIGHT
CCL3	1.0 LBS/EACH .45 Kg/EACH

NOTES:
1. VISIT OUR ON-LINE CATALOG AT WWW.PANDUIT.COM FOR A LIST OF CURRENT PARTS APPLICABLE FOR USE WITH THIS PRODUCT.
2. PARTS SUPPLIED:
   - 1 - SWING HANDLE
   - 1 - CAM SCREW
   - 1 - 90° HANDLE STOP DISC
   - 1 - SUPPORT
   - 2 - SUPPORT SCREWS
   - 2 - KEYS (KEYED ALIKE)
3. COMBINATION LOCK WILL WORK WITH:

   NET ACCESS:
   - SINGLE HINGE DOOR - N & S TYPE
   - SPLIT DOORS - N & S TYPE
   - SOLID SINGLE HINGE DOOR - N & S TYPE

DOOR HANDLE SHOWN OPEN
(KEYS NOT SHOWN)
ROTATION COUNTERCLOCKWISE TO OPEN
ROTATION IS REVERSIBLE

REV	DATE	BY	CHK	DESCRIPTION	ECN - R	CUST	SUP	OTH
03A	7-08-13	PBS	RCHA	RELEASED TO PRODUCTION	12V279WA-DC	JDWE		

MODEL FILENAME: 12V279WA/03.PRT

CAD FILENAME/LAYERS: 12V279WA_DC/03A.PRT

PANDUIT CORP. TINLEY PARK, ILLINOIS

SWINGHANDLE WITH 3 DIGIT COMBINATION LOCK (CCL3) CUSTOMER DRAWING

UNLESS OTHERWISE SPECIFIED, DIMENSIONAL TOLERANCES ARE:

INCHES		[METRIC - MILLIMETER]		ANGLE
X.X	+/- 0.06	X.	+/- 1.5	+/- 1°
X.XX	+/- 0.03	X.X	+/- 0.8	
X.XXX	+/- 0.015	X.XX	+/- 0.4	

UNLESS OTHERWISE SPECIFIED, ALL DIMENSIONS ARE GIVEN IN INCHES, THIRD ANGLE PROJECTION.

DRAWN BY: PBS

MAT'L:

DATE: 7-08-13

CHK'D: RCHA

SCALE: 1:2

DRAWING NO.: 12V279WA-DC SHT 1 OF 1

DWG SIZE: A