WISENET X

XNO-6120R

2M Network IR Bullet Camera

Key Features

- Max. 2Megapixel (1920 x 1080) resolution
- 5.2 ~ 62.4mm (Optical 12X) Optical Lens
- Max. 60fps@all resolutions (H.265 / H.264)
- H.265, H.264, MJPEG Codec Supported, Multiple streaming
- Day & Night (ICR), WDR (150dB), Defog
- DIS with built-in Gyro sensor
- Loitering, Directional detection, Fog Detection, Audio detection, Sound Classification, Tampering
- Motion Detection, Handover
- SD / SDHC / SDXC 2 Slot (Max. 512GB)
- Hallway View, WiseStreamII Support
- IR Viewable Length 70m (229.66ft), IP67 / IP66, NEMA 4X, IK10
- LDC Support (Lens Distortion Correction)
- PoE , 24V AC, 12V DC, Bi-directional audio Support

Dimensions

Unit : mm (inch)

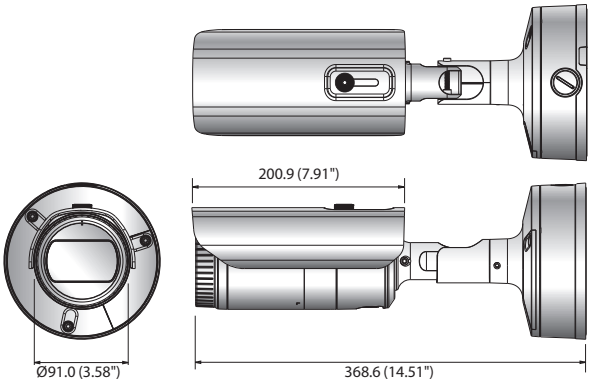

Accessories (Optional)

SBP-302PM

	XNO-6120R
VIDEO	
Imaging Device	1/2.8" 2M CMOS
Total Pixels	1,945(H) x 1,109(V) 2.16M
Effective Pixels	1,945(H) x 1,097(V) 2.13M
Scanning System	Progressive
Min. Illumination	Color : 0.03 Lux (F1.6, 1/30sec), B/W : 0Lux (IR LED on)
S / N Ratio	50dB
Video Out	CVBS : 1.0 Vp-p / 75Ω Composite, 720 x 480(N), 720 x 576(P), for Installation USB : Micro USB Type B, 1280 x 720, for Installation
LENS	
Focal Length (Zoom Ratio)	5.2 ~ 62.4mm (Optical 12X)
Max. Aperture Ratio	F1.6(Wide) ~ F3.0(Tele)
Angular Field of View	H : 54.58°(Wide) ~ 5.30°(Tele) / V : 32.19°(Wide) ~ 3.00°(Tele) / D : 61.40°(Wide) ~ 6.06°(Tele)
Min. Object Distance	1.5m (4.92ft)
Focus Control	Auto / Manual / One shot AF
Lens / Mount Type	DC Auto Iris / Board-in Type
OPERATIONAL	
IR Viewable Length	70m (229.66ft)
Camera Title	Off / On (Displayed up to 85 Characters) - W/W : English / Numeric / Special Characters - China : English / Numeric / Special / Chinese Characters - Common : Multi-line (Max. 5), Color (Grey / Green / Red / Blue / Black / White), Transparency, Auto scale by Resolution
Day & Night	Auto (ICR) / Color / B/W / External / Schedule
Backlight Compensation	Off / BLC / HLC / WDR
Wide Dynamic Range	150dB
Contrast Enhancement	SSDR (Off / On)
Digital Noise Reduction	SSNRV (2D + 3D Noise filter) (Off / On)
Digital Image Stabilization	Off / On (Built-in Gyro sensor)
Defog	Off / Auto / Manual
Motion Detection	Off / On (8ea, 8Point polygonal zones), Handover
Privacy Masking	Off / On (32ea, Rectangle zones) - Color : Grey / Green / Red / Blue / Black / White - Mosaic
Gain Control	Off / Low / Middle / High
White Balance	ATW / AWC / Manual / Indoor / Outdoor (Included Mercury & Sodium)
Contrast	Level Adjusment
LDC (Lens Distortion Correction)	Off / On (5 Levels with Min / Max)
Electronic Shutter Speed	Minimum / Maximum / Anti Flicker (2 ~ 1/12,000sec)
Digital Zoom	24x
Preset	300ea
Rotate Image	Flip : Off / On , Mirror : Off / On, Hallway : 90° / 270°
Video & Audio Analytics	Tampering, Loitering, Directional detection, Defocus Detection, Fog Detection, Virtual Line, Enter / Exit, (Dis)Appear, Audio detection, Face detection, Motion detection, Sound Classification
Alarm I/O	Input 1ea / Output 1ea
Alarm Triggers	Alarm Input, Motion detection, Video & Audio Analytics, Network disconnect
Alarm Events	File Upload Via FTP, E-mail, Notification via e-mail, Local Storage (SD / SDHC / SDXC) or NAS recording at event triggers, External output, Preset
Pixel Counter	Support
NETWORK	
Ethernet	RJ-45 (10/100 BASE-T)
Video Compression Format	H.265 / H.264 (MPEG-4 part 10/AVC) : Main / Baseline / High, MJPEG
Resolution	1920 x 1080, 1280 x 1024, 1280 x 960, 1280 x 720, 1024 x 768, 800 x 600, 800 x 448, 720 x 576, 720 x 480, 640 x 480, 640 x 360, 320 x 240
Max. Framerate	H.265 / H.264 : Max. 60fps at all resolutions, MJPEG : Max. 30fps at all resolutions
Smart Codec	Manual Mode (Area-Based : 5ea)
WiseStreamII	Support
Video Quality Adjustment	H.265 / H.264 : MJPEG : Target bitrate level control
Bitrate Control Method	H.265 / H.264 : CBR or VBR, MJPEG : VBR
Streaming Capability	Multiple streaming (Up to 10 Profiles)
Audio In	Selectable (Mic in / Line in), Supply Voltage : 2.5V DC (4mA), Input Impedance : Approx. 2K Ohm
Audio Out	Line Out (3.5mm Mono Jack), Max Output Level: 1 Vrms
Audio Compression Format	G.711 u-law/G.726 Selectable, G.726 (ADPCM) 8KHz, G.711 8KHz G.726 : 16Kbps, 24Kbps, 32Kbps, 40Kbps, AAC-LC : 48Kbps at 16KHz
Audio Communication	Bi-directional (2-way)
IP	IPv4, IPv6
Protocol	TCP/IP, UDP/IP, RTP (UDP), RTP (TCP), RTCP,RTSP, NTP, HTTP, HTTPS, SSL/TLS, DHCP, PPPoE, FTP, SMTP, ICMP, IGMP, SNMPv1/v2c/v3 (MIB-2), ARP, DNS, DDNS, QoS, PIM-SM, UPnP, Bonjour
Security	HTTPS (SSL) Login Authentication, Digest Login Authentication IP address filtering, User access log, 802.1X Authentication (EAP-TLS, EAP-LEAP)
Streaming Method	Unicast / Multicast
Max. User Access	20 Users at Unicast Mode
Edge Storage	SD / SDHC / SDXC 2Slot (Up to 512GB) - Continuous Recording (1st Slot to 2nd Slot) - Motion Images recorded in the SD / SDHC / SDXC Memory Card Can be Downloaded. NAS (Network Attached Storage), Local PC for Instant Recording
Application Programming Interface	ONVIF Profile S/G, SUNAPI 2.0 (HTTP API), Wisenet Open Platform
Webpage Language	English, Korean, Chinese, French, Italian, Spanish, German, Japanese, Russian, Swedish, Portuguese, Czech, Polish, Turkish, Dutch, Hungarian, Greek
Web Viewer	Supported OS : Windows 7, 8.1, 10, Mac OS X 10.10. 10.11 10.12 Non-Plugin Web Viewer Supported Browser : Google Chrome 56, MS Edge 39, Mozilla Firefox 49 (Window 64bit only), Apple Safari 10 (Mac OS X only) Plug-in Web Viewer Supported Browser : MS Explore 11, Apple Safari 10 (Mac OS X only)
Central Management Software	SmartViewer
ENVIRONMENTAL	
Operating Temperature / Humidity	-40°C ~ +55°C (-40°F ~ +131°F) / Less than 90% RH * Start up should be done at above -35°C (-31°F)
Storage Temperature / Humidity	-50°C ~ +60°C (-58°F ~ +140°F) / Less than 90% RH
Ingress Protection / Vandal Resistance	IP67, IP66, NEMA 4X / IK10
ELECTRICAL	
Input Voltage / Current	24V AC, 12V DC, PoE (IEEE802.3af Class3)
Power Consumption	24V AC : Max 14.5W, 12V DC : Max 12.5W, PoE : Max 12.95W
MECHANICAL	
Color / Material	Dark Gray / Aluminum
Dimensions (WxH)	Ø91.0mm x 368.6mm (Ø3.58" x 14.51")
Weight	2.18Kg (4.81 lb)

* The lastest product information / specification can be found at hanwha-security.com
* Design and specifications are subject to change without notice.

FIRST EDITION 05-2017 © 2017 Hanwha Techwin Co., Ltd. All rights reserved.

WISENET SAMSUNG