THIS COPY IS PROVIDED ON A RESTRICTED BASIS AND IS NOT TO BE USED IN ANY WAY DETRIMENTAL TO THE INTERESTS OF PANDUIT CORP.

H

PANDUIT PART NUMBER	WEIGHT
FROVRA6X4	0.84 LB/EACH (382g/EACH)

K

J NOTES:

1. SEE CURRENT CATALOG FOR ADDITIONAL PART SUFFIXES TO INDICATE COLOR AND/OR PACKAGE QUANTITY.
2. THE FIBERRUNNER 6x4 OUTSIDE VERTICAL RIGHT ANGLE FITTING IS DESIGNED WITH A MINIMUM 2" (50.8) BEND RADIUS TO PROTECT FIBER OPTIC CABLES.
3. DIMENSIONS IN PARENTHESES ARE IN METRIC.

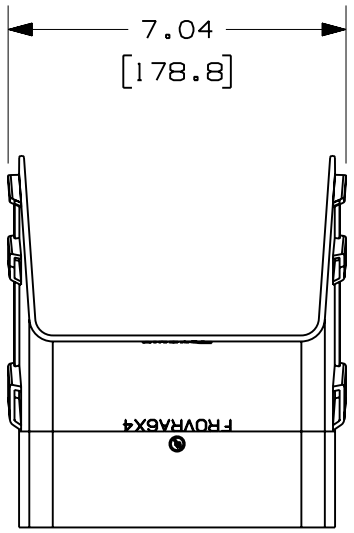

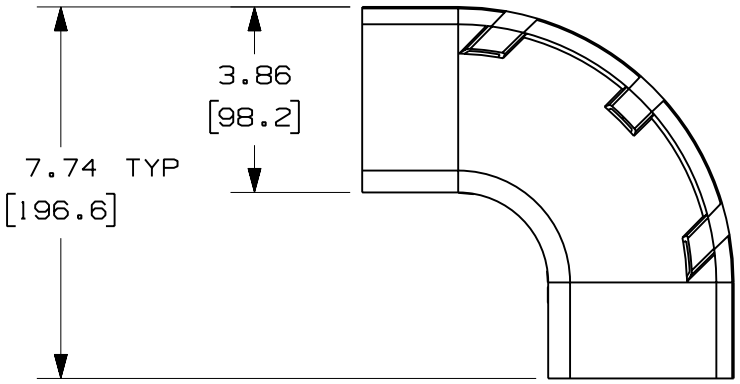

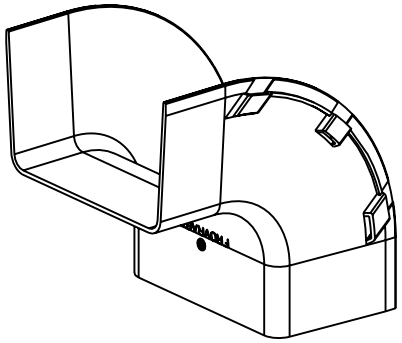

ENG. REF.: D37185E0_DC_FROVRA6X4_02.prt

CAD FILENAME/LAYERS I FROVRA6X4.pdf

PANDUIT CORP TINLEY PARK, ILLINOIS

FIBERRUNNER 6x4 OUTSIDE VERTICAL RIGHT ANGLE FITTING (FROVRA6X4)

CUSTOMER DRAWING

UNLESS OTHERWISE SPECIFIED, DIMENSIONAL TOLERANCES ARE:
(.X) ± (.XXX) ±
(.XX) ±.03 (.8) ANGLES ±

UNLESS OTHERWISE SPECIFIED, ALL DIMENSIONS ARE GIVEN IN INCHES, THIRD ANGLE PROJECTION.

REV	DATE	BY	CHK	DESCRIPTION	ECN	-	R	CUST	SUP	GMBH
-	--------	---	---	K. REVISED PART WEIGHT J. REVISED GENERAL NOTES	--------	--	--			
3	7-10-06	DTP	RN	I. REVISED CAD FILENAME H. REVISED AND REDRAWN	37185-61	RN	RN			

DRAWN BY REWE
DATE 4-28-00
CHK'D HIW
MAT'L: ABS
SCALE NONE
DRAWING NO. 37185-61
DWG A
SIZE