THIS COPY IS PROVIDED ON A RESTRICTED BASIS AND IS NOT TO BE USED IN ANY WAY DETRIMENTAL TO THE INTERESTS OF PANDUIT CORP.

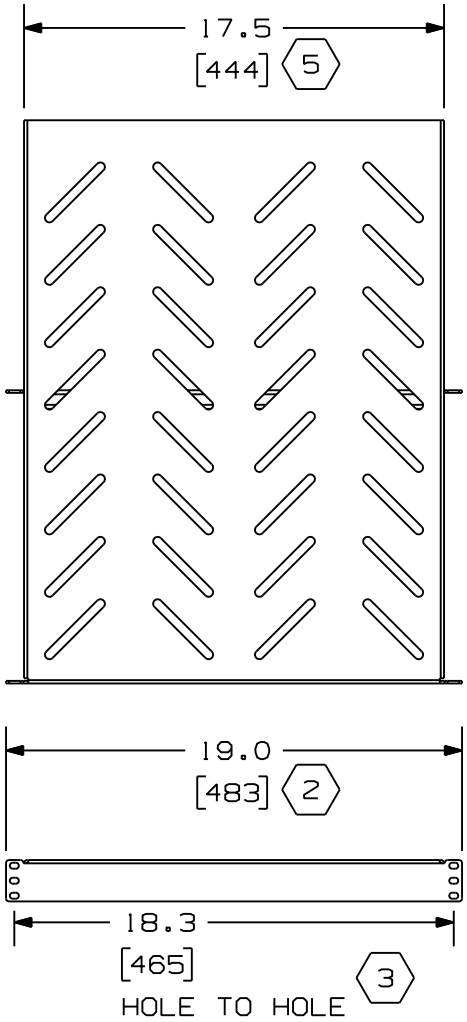

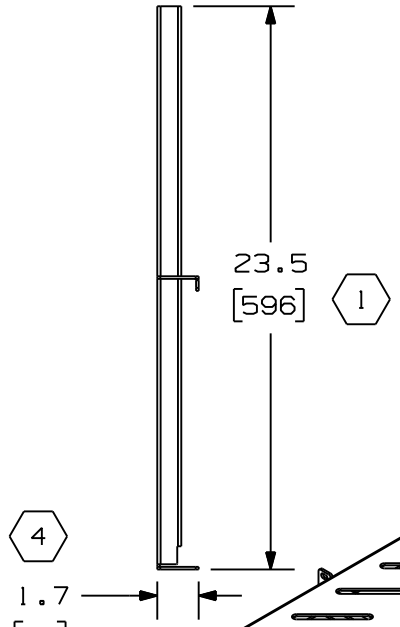

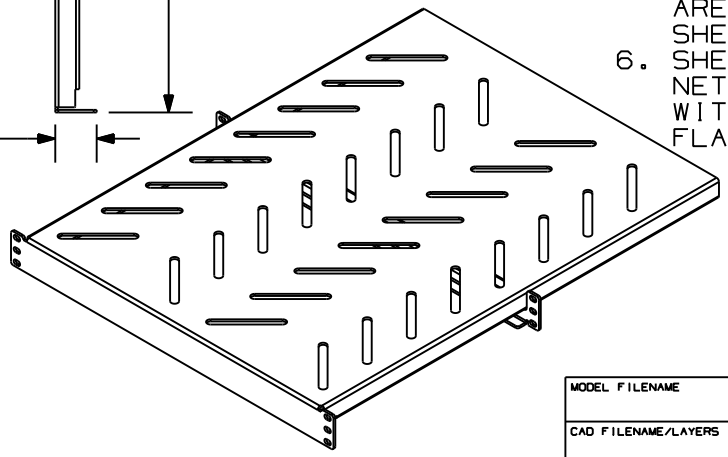

PANDUIT P/N	WEIGHT
RSHLF23	16.00 LBS/EACH 7.26 Kgs/EACH

NOTES:

1. VISIT OUR ON-LINE CATALOG AT WWW.PANDUIT.COM FOR A CURRENT LIST OF PRODUCTS APPLICABLE FOR USE WITH THIS PART.
2. COMPONENTS:
   1- BASE SHELF
   1- MOUNTING BRACKET
   2- 12-24 SCREWS (PACK OF 4)
   2- M6 METRIC SCREWS (PACK OF 4)
3. DIMENSIONS IN PARENTHESIS ARE METRIC.
4. SHELF MOUNTING BRACKET IS ADJUSTABLE ALONG THE DEPTH OF THE SHELF.
5. LOAD RATING IS 275 LBS WHEN RAILS ARE SPACED A MINIMUM OF HALF THE SHELF DEPTH.
6. SHELF IS DESIGNED TO SUPPORT LARGE NETWORKING EQUIPMENT IN COMBINATION WITH SUPPLIED EQUIPMENT MOUNTING FLANGES.

MODEL FILENAME: V10679ZN/00

CAD FILENAME/LAYERS: V10679ZN_DC/00B

PANDUIT CORP. TINLEY PARK, ILLINOIS

RSHLF23 - 19"X23" DEEP SHELF FOR 4 POST RACK - CUSTOMER DRAWING

UNLESS OTHERWISE SPECIFIED, DIMENSIONAL TOLERANCES ARE:
(.X) ± .03 (.XXX) ± .005
(.XX) ± .01 ANGLES ± 1°

UNLESS OTHERWISE SPECIFIED, ALL DIMENSIONS ARE GIVEN IN INCHES, THIRD ANGLE PROJECTION.

REV	DATE	BY	CHK	DESCRIPTION	ECN - R	CUST	SUP	OTH
00B	09-24-09	BAME	DSI	UPDATED LOAD RATING	V10679ZN-DC			
00A	8-04-09	DSI	DPN	RELEASED TO PRODUCTION	V10679ZN-DC	CMK		

DRAWN BY: DSI
DATE: 8-04-09
CHK'D: DPN
MAT'L: STEEL
SCALE: 1/8
DRAWING NO.: V10679ZN-DC
DWG SIZE: A